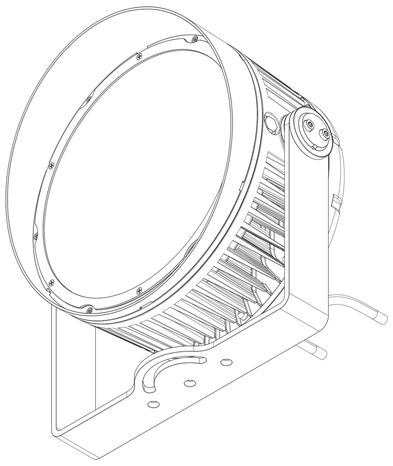

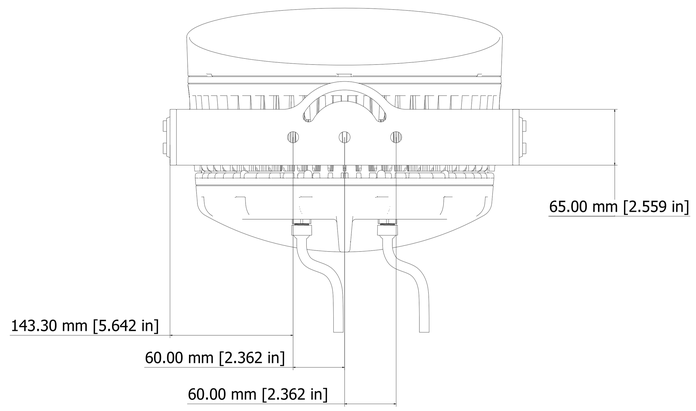

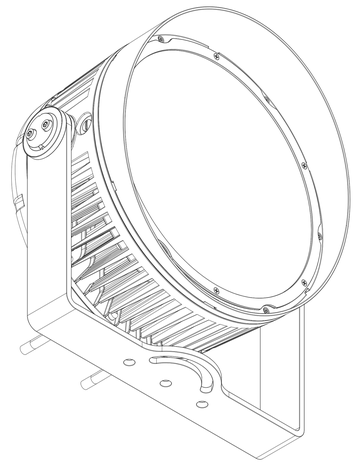

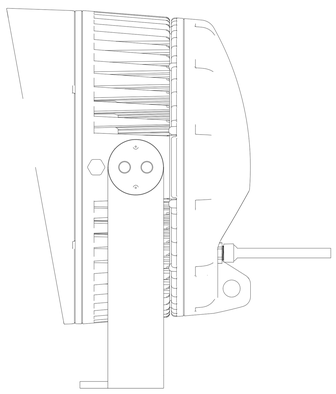

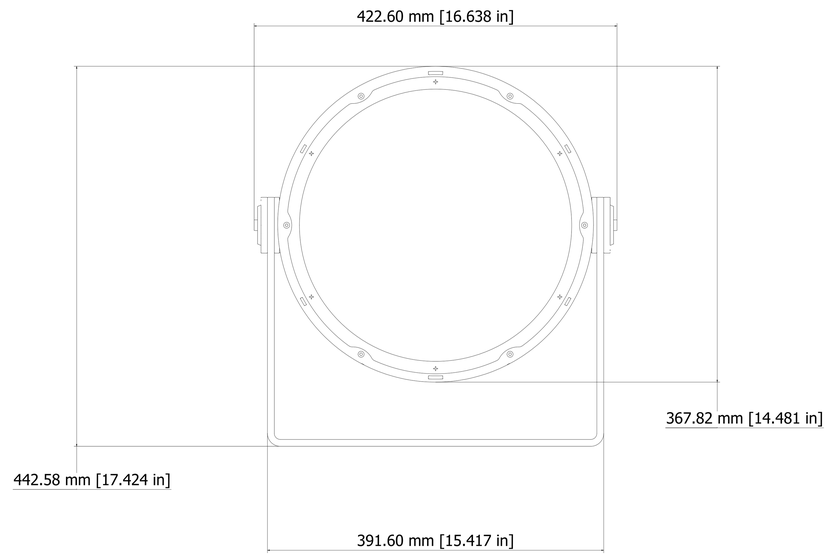

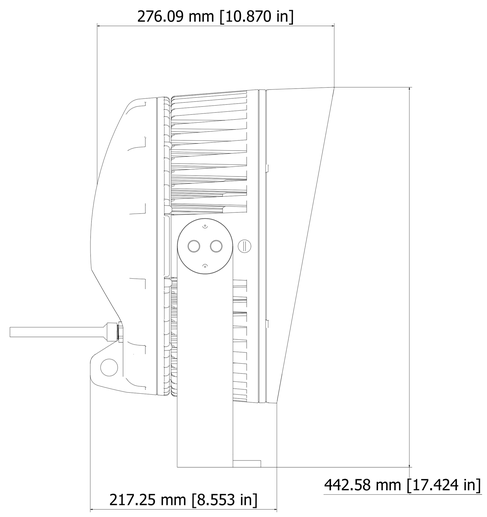

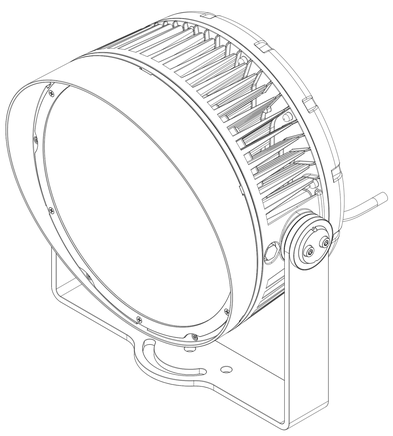

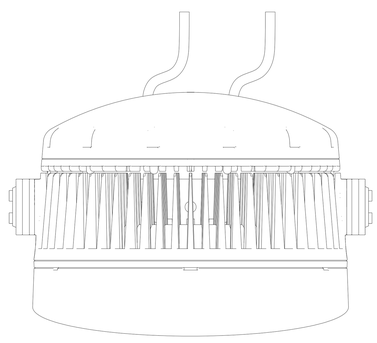

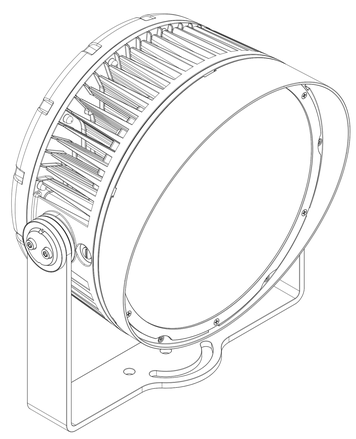

DRAWN	DATE	TITLE
D.Gooch	9/12/2019	Dumpster GL

CHAUVET PROFESSIONAL

© Chauvet & Sons, LLC (2019)
All Product specifications and dimensions are subject to change without notice

SCALE 1 : 1